VEAB Heat Tech AB

PGK
Rectangular duct coolers for cooled water

PGK

Rectangular duct coolers for cooled water

The PGK with rectangular duct connection uses chilled water as the energy carrier and is used for cooling the ventilation air in a ventilation system. The PGK can also be used for cooling individual rooms or zones.
For controlling the room or supply air temperature, the duct cooler is supplemented with regulators, sensors, actuators and valves.

- 17 standard sizes
- Same model for left-hand or right-hand installation
- Stainless steel condensate drip tray
- A droplet eliminator can be fitted regardless of the direction of air flow
- Tappings for venting and drainage
- Easily removable drip tray to simplify cleaning and inspection
- Fins with hydrophilic coating for better water run-off
- The coil is easily accessible for cleaning through the removable drip tray

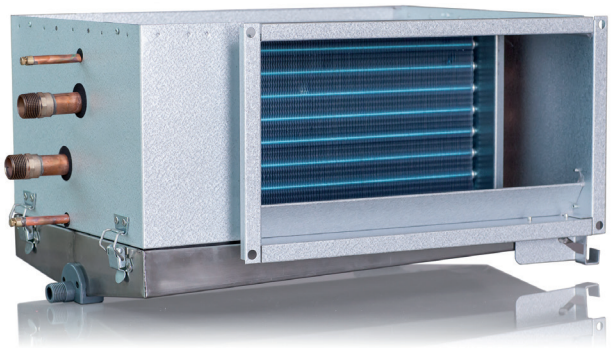

Design

The casing is made of Aluzinc-coated sheet steel, AZ 185. The coil has copper tubes and aluminium fins with hydrophilic coating. Tappings for venting and drainage. Stainless steel drip tray for condensate collection, with G½" drain connection.

Operating data

Max. operating press.: 1,0 MPa (10 bar)
The coils are pressure tested and tested for leakage.

Capacity

Examples of capacity for each size are given on pages 4 and 5. You can also do your own calculations using our web-based VEAB Select calculation program (www.veab.com), or get in touch with our sales technicians for assistance.

Installation

The PGK is intended for installation in a horizontal duct, with the air flow in either direction.

Control

See pages 6 to 9 for a list of regulators, sensors, valves and actuators.

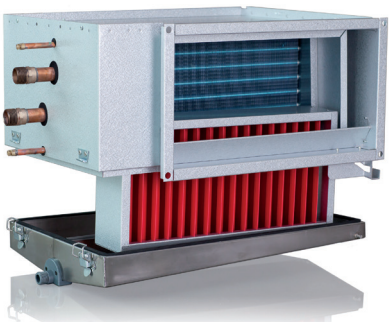

PGK with DE droplet eliminator fitted

Hygiene

The design, that facilitates cleaning and the prevention of water accumulation, ensures that particles and stagnant water does not introduce bacteria to the air stream. In this way, fresh and healthy air is assured.

Droplet eliminator, DE

We recommend that a droplet eliminator should be installed on the outlet side of the coil if the air velocity is in excess of 2.5 m/s. This prevents water droplets being entrained by the air flow out into the duct system. The collected water is discharged through the stainless steel condensate drip tray. The droplet eliminator is easily accessible after the drip tray has been removed. The droplet eliminator must be ordered separately.

Pressure drop across droplet eliminator

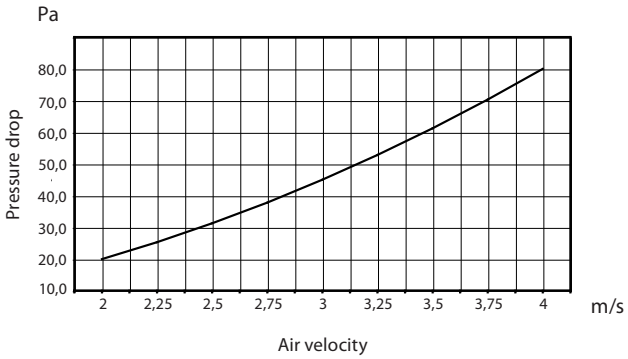

Product range overview and dimensions

Type	B mm	H mm	I mm	K mm	M mm	N conn. R	Coil inside volume l	DE
PGK 250x150-4-2,0	288	188	70	165	65	3/4"	0,63	DE 25x15
PGK 400×200-3-2.0	438	238	70	176	43	3/4"	0.65	DE 40x20
PGK 400×200-4-2.0	438	238	70	176	43	3/4"	0.87	DE 40x20
PGK 500×250-3-2.0	538	288	120	176	43	3/4"	1.02	DE 50x25
PGK 500×250-4-2.0	538	288	120	176	43	3/4"	1.36	DE 50x25
PGK 500×300-3-2.0	538	338	175	176	43	3/4"	1.23	DE 50x30
PGK 500×300-4-2.0	538	338	175	176	43	3/4"	1.64	DE 50x30
PGK 600×300-3-2.0	638	338	170	176	43	3/4"	1.47	DE 60x30
PGK 600×300-4-2.0	638	338	170	176	43	3/4"	1.96	DE 60x30
PGK 600×350-3-2.0	638	388	220	176	43	3/4"	1.72	DE 60x35
PGK 600×350-4-2.0	638	388	220	176	43	1"	2.29	DE 60x35
PGK 700×400-3-2.0	738	438	250	170	55	1"	3.09	DE 70x40
PGK 700×400-4-2.0	738	438	250	170	55	1"	4.12	DE 70x40
PGK 800×500-3-2.0	838	538	340	170	55	1"	4.42	DE 80x50
PGK 800×500-4-2.0	838	538	340	170	55	1¼"	5.89	DE 80x50
PGK 1000×500-3-2.0	1038	538	350	170	55	1"	5.52	DE 100x50
PGK 1000×500-4-2.0	1038	538	350	170	55	1¼"	7.36	DE 100x50

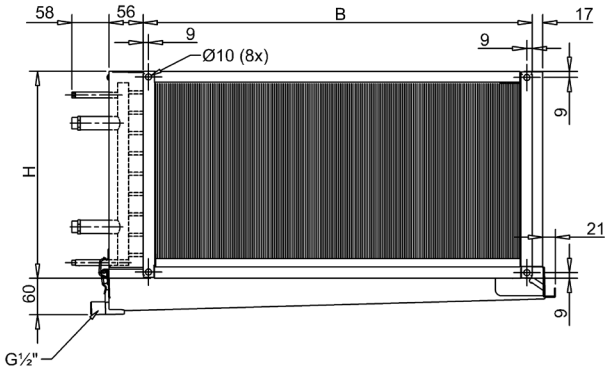

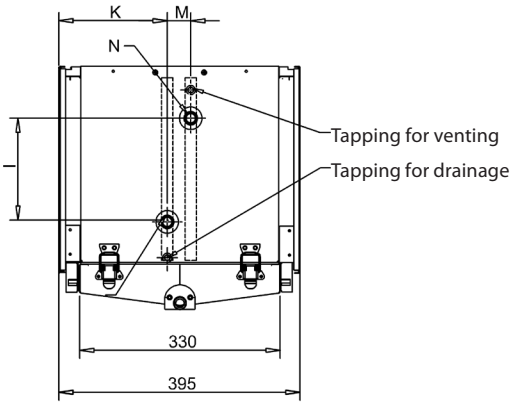

Project design/ordering

Descriptive text for - PGK

VEAB type PGK duct cooler with casing made of Aluzinc-coated sheet steel, AZ 185, coil with copper tubes and aluminium fins with hydrophilic coating. Stainless steel drip tray for condensate. The cooler is controlled by an external regulator, sensors, valves and actuators, which must be ordered separately. The DE droplet eliminator should be ordered if the air velocity is higher than 2.5 m/s.

Type designation PGK 400×200 - 3 - 2.0

(example)

Size designation

Number of tube rows

Fin pitch, mm

Specify the following for project ordering:

1. Duct size: - mm
2. Air flow rate: - m^3/h
3. Inlet air temp.: - °C
4. Inlet air humidity: - % RH
5. Outlet air temp. or required output: - °C or kW
6. Inlet water temp.: - °C
7. Outlet water temp. or water flow: - °C or l/sec
8. Anti-freeze agent: - type / %
9. Droplet eliminator, if any:

Capacity PGK 400×200-3-2,0

Water temperature 6/12°C

Air flow	Press. drop	Inlet air temp.	Inlet air humidity	Outlet air temp.	Output	Water flow	Water press. drop
m³/h	Pa	°C	% RH	°C	kW	l/s	kPa
576	40	25	50	15.4	1.9	0.08	2.2
576	43	30	45	16.5	3.2	0.13	5.6
864	81	25	50	16.1	2.7	0.11	4.0
864	84	30	45	17.8	4.2	0.17	9.4
1152	138	25	50	16.8	3.2	0.13	5.9
1152	143	30	45	18.8	5.0	0.20	13.2

Capacity PGK 500×250-3-2,0

Water temperature 6/12°C

Air flow	Press. drop	Inlet air temp.	Inlet air humidity	Outlet air temp.	Output	Water flow	Water press. drop
m³/h	Pa	°C	% RH	°C	kW	l/s	kPa
900	41	25	50	14.8	3.4	0.13	4.8
900	44	30	45	16.1	5.3	0.21	11.0
1350	82	25	50	15.7	4.5	0.18	8.2
1350	86	30	45	17.5	6.9	0.28	18.3
1800	140	25	50	16.4	5.5	0.22	11.6
1800	145	30	45	18.5	8.3	0.33	25.6

Capacity PGK 500×300-3-2,0

Water temperature 6/12°C

Air flow	Press. drop	Inlet air temp.	Inlet air humidity	Outlet air temp.	Output	Water flow	Water press. drop
m³/h	Pa	°C	% RH	°C	kW	l/s	kPa
1080	41	25	50	14.9	4.0	0.16	5.0
1080	43	30	45	16.2	6.3	0.25	12.0
1620	82	25	50	15.8	5.3	0.21	8.7
1620	85	30	45	17.6	8.2	0.33	20.0
2160	139	25	50	16.5	6.4	0.26	12.5
2160	144	30	45	18.6	9.8	0.39	28.1

Capacity PGK 600×300-3-2,0

Water temperature 6/12°C

Air flow	Press. drop	Inlet air temp.	Inlet air humidity	Outlet air temp.	Output	Water flow	Water press. drop
m³/h	Pa	°C	% RH	°C	kW	l/s	kPa
1296	41	25	50	14.9	4.7	0.19	5.9
1296	43	30	45	16.2	7.5	0.30	14.2
1944	82	25	50	15.8	6.4	0.25	10.4
1944	85	30	45	17.6	9.8	0.39	23.9
2592	139	25	50	16.5	7.7	0.31	14.9
2592	144	30	45	18.6	11.7	0.47	33.6

Capacity PGK 600×350-3-2,0

Water temperature 6/12°C

Air flow	Press. drop	Inlet air temp.	Inlet air humidity	Outlet air temp.	Output	Water flow	Water press. drop
m³/h	Pa	°C	% RH	°C	kW	l/s	kPa
1512	41	25	50	14.9	5.5	0.22	7.3
1512	43	30	45	16.2	8.8	0.35	17.7
2268	82	25	50	15.8	7.4	0.29	12.9
2268	85	30	45	17.6	11.4	0.45	29.8
3024	139	25	50	16.5	9.0	0.36	18.6
3024	144	30	45	18.6	13.7	0.54	42.0

Capacity PGK 700×400-3-2,0

Water temperature 6/12°C

Air flow	Press. drop	Inlet air temp.	Inlet air humidity	Outlet air temp.	Output	Water flow	Water press. drop
m³/h	Pa	°C	% RH	°C	kW	l/s	kPa
1920	42	25	50	15.1	6.7	0.27	3.7
1920	44	30	45	16.4	10.5	0.42	8.8
2880	82	25	50	16.0	8.9	0.35	6.4
2880	85	30	45	17.8	13.5	0.54	14.3
3840	139	25	50	16.8	10.7	0.42	9.1
3840	143	30	45	18.9	16.0	0.64	19.8

Capacity PGK 800×500-3-2,0

Water temperature 6/12°C

Air flow	Press. drop	Inlet air temp.	Inlet air humidity	Outlet air temp.	Output	Water flow	Water press. drop
m³/h	Pa	°C	% RH	°C	kW	l/s	kPa
2743	42	25	50	14.8	9.9	0.40	6.8
2743	45	30	45	16.3	15.4	0.61	15.7
4115	82	25	50	15.9	13.1	0.52	11.5
4115	86	30	45	17.7	19.8	0.79	25.6
5486	140	25	50	16.6	15.7	0.62	16.2
5486	144	30	45	18.8	23.4	0.93	35.4

Capacity PGK 1000×500-3-2,0

Water temperature 6/12°C

Air flow	Press. drop	Inlet air temp.	Inlet air humidity	Outlet air temp.	Output	Water flow	Water press. drop
m³/h	Pa	°C	% RH	°C	kW	l/s	kPa
3429	42	25	50	14.9	12.4	0.49	9.1
3429	45	30	45	16.3	19.2	0.76	21.4
5144	82	25	50	15.9	16.3	0.65	15.6
5144	86	30	45	17.7	24.7	0.98	35.1
6858	140	25	50	16.7	19.5	0.77	22.1
6858	144	30	45	18.8	29.2	1.16	48.6

Capacity PGK 250×150-4-2,0

Please use VEAB Select at www.veab.com

Capacity PGK 400×200-4-2,0

Water temperature 6/12°C

Air flow	Press. drop	Inlet air temp.	Inlet air humidity	Outlet air temp.	Output	Water flow	Water press. drop
m³/h	Pa	°C	% RH	°C	kW	l/s	kPa
576	54	25	50	14.6	2.1	0.08	1.4
576	58	30	45	14.9	3.8	0.15	3.9
864	109	25	50	14.9	3.2	0.13	2.8
864	114	30	45	16.0	5.1	0.20	6.8
1152	185	25	50	15.5	3.9	0.16	4.2
1152	194	30	45	17.0	6.2	0.25	9.8

Capacity PGK 500×250-4-2,0

Water temperature 6/12°C

Air flow	Press. drop	Inlet air temp.	Inlet air humidity	Outlet air temp.	Output	Water flow	Water press. drop
m³/h	Pa	°C	% RH	°C	kW	l/s	kPa
900	56	25	50	13.3	4.1	0.16	3.8
900	59	30	45	14.1	6.5	0.26	8.7
1350	112	25	50	14.2	5.6	0.22	6.7
1350	116	30	45	15.4	8.6	0.34	14.8
1800	189	25	50	14.9	6.9	0.27	9.6
1800	197	30	45	16.5	10.5	0.42	21.2

Capacity PGK 500×300-4-2,0

Water temperature 6/12°C

Air flow	Press. drop	Inlet air temp.	Inlet air humidity	Outlet air temp.	Output	Water flow	Water press. drop
m³/h	Pa	°C	% RH	°C	kW	l/s	kPa
1080	56	25	50	13.3	5.0	0.20	4.1
1080	59	30	45	14.1	7.8	0.31	9.5
1620	112	25	50	14.2	6.7	0.27	7.3
1620	116	30	45	15.4	10.4	0.41	16.3
2160	189	25	50	14.9	8.2	0.33	10.6
2160	197	30	45	16.5	12.6	0.50	23.4

Capacity PGK 600×300-4-2,0

Water temperature 6/12°C

Air flow	Press. drop	Inlet air temp.	Inlet air humidity	Outlet air temp.	Output	Water flow	Water press. drop
m³/h	Pa	°C	% RH	°C	kW	l/s	kPa
1296	55	25	50	13.8	5.5	0.22	3.2
1296	59	30	45	14.5	8.9	0.35	7.9
1944	110	25	50	14.5	7.6	0.30	5.9
1944	115	30	45	15.7	11.9	0.47	13.8
2592	187	25	50	15.2	9.4	0.37	8.7
2592	195	30	45	16.7	14.5	0.57	19.8

Capacity PGK 600×350-4-2,0
Water temperature 6/12°C

Air flow	Press. drop	Inlet air temp.	Inlet air humidity	Outlet air temp.	Output	Water flow	Water press. drop
m³/h	Pa	°C	% RH	°C	kW	l/s	kPa
1512	56	25	50	13.6	6.6	0.26	3.0
1512	59	30	45	14.3	10.6	0.42	7.1
2268	111	25	50	14.4	9.1	0.36	5.4
2268	115	30	45	15.6	14.1	0.56	12.2
3024	188	25	50	15.1	11.1	0.44	7.8
3024	196	30	45	16.6	17.1	0.68	17.5

Capacity PGK 700×400-4-2,0
Water temperature 6/12°C

Air flow	Press. drop	Inlet air temp.	Inlet air humidity	Outlet air temp.	Output	Water flow	Water press. drop
m³/h	Pa	°C	% RH	°C	kW	l/s	kPa
1920	59	25	50	13.0	9.2	0.36	5.6
1920	61	30	45	13.9	13.9	0.55	12.1
2880	114	25	50	14.0	12.2	0.48	9.5
2880	118	30	45	15.4	18.3	0.73	20.3
3840	192	25	50	14.8	14.7	0.58	13.4
3840	198	30	45	16.5	21.9	0.87	28.6

Capacity PGK 800×500-4-2,0
Water temperature 6/12°C

Air flow	Press. drop	Inlet air temp.	Inlet air humidity	Outlet air temp.	Output	Water flow	Water press. drop
m³/h	Pa	°C	% RH	°C	kW	l/s	kPa
2743	58	25	50	13.5	12.2	0.48	3.0
2743	61	30	45	14.4	18.9	0.75	6.9
4115	112	25	50	14.4	16.3	0.65	5.2
4115	117	30	45	15.8	24.8	0.99	11.5
5486	189	25	50	15.1	19.7	0.78	7.4
5486	197	30	45	16.8	29.8	1.18	16.1

Capacity PGK 1000×500-4-2,0
Water temperature 6/12°C

Air flow	Press. drop	Inlet air temp.	Inlet air humidity	Outlet air temp.	Output	Water flow	Water press. drop
m³/h	Pa	°C	% RH	°C	kW	l/s	kPa
3429	59	25	50	12.9	16.8	0.67	6.2
3429	61	30	45	13.8	25.2	1.00	13.2
5144	114	25	50	13.9	22.2	0.88	10.4
5144	118	30	45	15.3	33.1	1.32	22.0
6858	192	25	50	14.7	26.7	1.06	14.7
6858	199	30	45	16.4	39.7	1.58	30.9

Regulators

AQUA24TF

RC

RC-DO

OPTIGO OP10

AQUA

Complete regulator with built-in room sensor. Floating control for controlling three-position actuators. Cascade connection with minimum limit for room temperature control. Can be equipped with external room and/or duct sensor and external setpoint adjustment. Temperature range 0 - 30°C, depending on the sensor employed.

AQUA24TF

24V supply. The regulator has a built-in controlling anti-freeze protection with two alarm relays and automatic control for heating during stoppage.

REGIO MINI

Complete regulator with built-in room sensor. Can be equipped with external room and/or duct sensors. Has two control outputs, e.g. for heating and cooling in sequence.

RC

24V supply. 0…10V output control signal.
DIP switches are used for basic 20 - 26°C setpoint setting. The basic setting can be adjusted by ±3°C by means of the setpoint knob.

RC-DO

24V supply. 0…10V output control signal. The RC-DO has a back-lit display and a temperature range of 0 - 50°C.

OPTIGO

Regulator with display. One knob for all settings. For mounting on DIN rail. Operates with PT1000 sensor in the range of -20°C to + 40°C. Started/stopped with "run" signal from the fan.

OP5

24V supply. 0...10V control signal output. Operates with one sensor (room or duct sensor). Can be reset for heating or cooling control.

OP10

24V supply. Can be reset for 0…10V control signal output or 3-point control. Two control outputs, e.g. for heating and cooling in sequence. Input for two sensors and anti-freeze sensor. Supply air temperature control or room temperature control with cascade-controlled supply air. Anti-freeze control with heating during stoppage. Output, e.g. for starting/stopping of fans via 230V~, 5A relay. Programmable one-week timer for controlling of both fan and heating/cooling. Terminal for external timer that extends the operating time. Can be equipped with external setpoint adjuster.

OP10-230

Same functions as the OP10, but with 230V~ supply.

Accessories for AQUA

	Product	Range	Design
	Duct sensor TG-K330	0-30°C	Degree of protection IP20
	Room sensor TG-R430 with setpoint adjustment	0-30°C	Degree of protection IP30
	Room sensor TG-R530	0-30°C	Degree of protection IP30
	Room sensor TG-R630	0-30°C	Degree of protection IP54
	Trafo 60 Totally enclosed transformer for wall mounting. Built-in two-pole fuse on secondary side.		Primary voltage 230V~ Secondary voltage 24V~ Max. rating 60 VA Degree of protection IP44

Accessories for OPTIGO and REGIO

	Product	Range	Design
	Duct sensor TG-K3/PT1000	-30...+70°C	Degree of protection IP20
	Room sensor TG-R5/PT1000	0-50°C	Degree of protection IP30
	Room sensor TG-UH/PT1000	-30...+120°C	Degree of protection IP65
	Trafo 60 Totally enclosed transformer for wall mounting. Built-in two-pole fuse on secondary side.		Primary voltage 230V~ Secondary voltage 24V~ Max. rating 60 VA Degree of protection IP44

PGK

Actuators and valves for Kv 0.25 – 8.0

(110°C max)

Description	Type
3-position actuator for ZTV/ZTR valves, degree of protection IP44	RVAZ4-24
Actuator for 0...10V signal for ZTV/ZTR valves, degree of protection IP44	RVAZ4-24A

Description	Kv	Type
2-way ½" valve	0.25	ZTV15-0.25
2-way ½" valve	0.4	ZTV15-0.4
2-way ½" valve	0.6	ZTV15-0.6
2-way ½" valve	1.0	ZTV15-1.0
2-way ½" valve	1.6	ZTV15-1.6
2-way ¾" valve	2.0	ZTV20-2.0
2-way ¾" valve	2.5	ZTV20-2.5
2-way ¾" valve	4.0	ZTV20-4.0
2-way ¾" valve	6.0	ZTV20-6.0
2-way 1" valve	8.0	ZTVB25-8.0
3-way ½" valve	0.25	ZTR15-0.25
3-way ½" valve	0.4	ZTR15-0.4
3-way ½" valve	0.6	ZTR15-0.6
3-way ½" valve	1.0	ZTR15-1.0
3-way ½" valve	1.6	ZTR15-1.6
3-way ¾" valve	2.0	ZTR20-2.0
3-way ¾" valve	2.5	ZTR20-2.5
3-way ¾" valve	4.0	ZTR20-4.0
3-way ¾" valve	6.0	ZTR20-6.0
3-way 1" valve	8.0	ZTRB25-8

Actuator RVAZ4-24

Valve ZTV

Valve ZTR

PGK

Guide for selection of valves and actuators for PGK coolers

110°C max. water temperature

Actuator RVAZ4-24 (3-position) or RVAZ4-24A (0…10V) can be used for all ZTV/ZTR valves.

Type of PGK	Valve type	Kv
PGK 400×200-3-2,0	2-way ZTV15-1,6	1.6
PGK 400×200-4-2,0	2-ways ZTV20-2,0	2.0
PGK 500×250-3-2,0	2-ways ZTV15-1,6	1.6
PGK 500×250-4-2,0	2-ways ZTV20-2,0	2.0
PGK 500×300-3-2,0	2-ways ZTV20-2,5	2.5
PGK 500×300-4-2,0	2-ways ZTV20-2,5	2.5
PGK 600×300-3-2,0	2-ways ZTV20-2,5	2.5
PGK 600×300-4-2,0	2-ways ZTV20-2,5	2.5
PGK 600×350-3-2,0	2-ways ZTV20-2,5	2.5
PGK 600×350-4-2,0	2-ways ZTV20-4,0	4.0
PGK 700×400-3-2,0	2-ways ZTV20-4,0	4.0
PGK 700×400-4-2,0	2-ways ZTV20-4,0	4.0
PGK 800×500-3-2,0	2-ways ZTV20-6,0	6.0
PGK 800×500-4-2,0	2-ways ZTVB25-8	8.0
PGK 1000×500-3-2,0	2-ways ZTV20-6,0	6.0
PGK 1000×500-4-2,0	2-ways ZTVB25-8	8.0

Pressure drops across valves

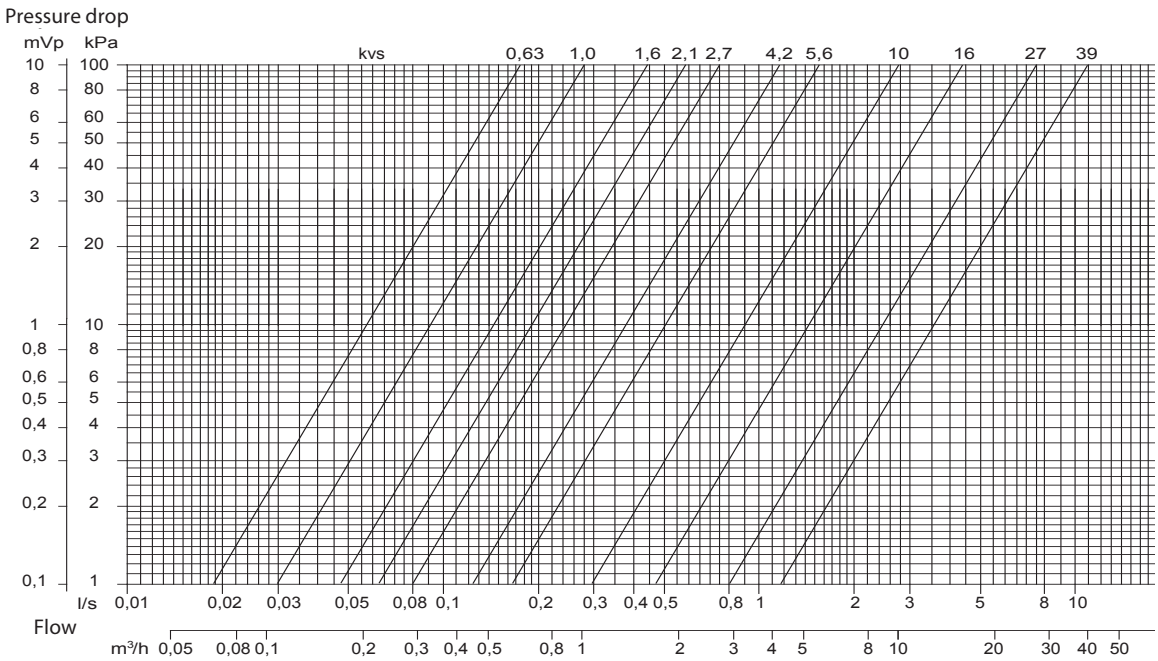

VEAB Heat Tech AB
Phone: +46(0)451-485 00 • Fax: +46(0)451-410 80
www.veab.com • veab@veab.com
Sweden